# Optimization of Mu2e Production Solenoid Heat and Radiation Shield

V.S. Pronskikh, R. Coleman, D. Glenzinski, V.V. Kashikhin, N.V. Mokhov
Fermi National Accelerator Laboratory, Batavia, IL 60510, U.S.A.

The Mu2e experiment at Fermilab is designed to study the conversion of a negative muon to electron in the field of a nucleus without emission of neutrinos, a process having an extremely low probability in Standard Model and predicted by a number of models beyond it. One of the main parts of the Mu2e experimental setup is a superconducting production solenoid (PS), in which negative pions from interactions of the 8 GeV proton beam with a tungsten target are collected. These negative pions decay to produce an

Figure 1. MARS15 model of Mu2e experimental setup

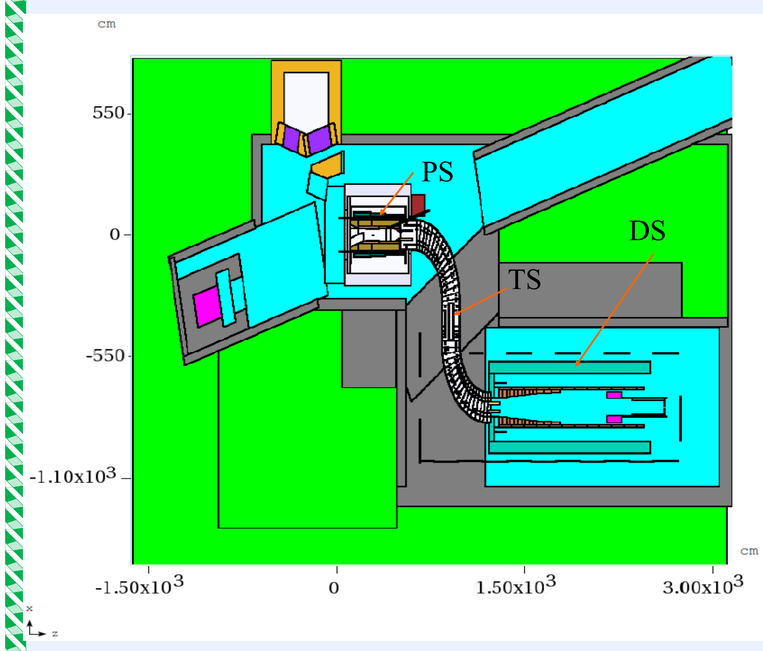


intense muon beam used by the experiment.

In order for the PS (see Figure 1) superconducting magnet to operate reliably, the peak neutron flux in the PS coils must be reduced by ~3 orders of magnitude by means of a sophisticatedly designed absorber, optimized for the performance and cost. An issue with radiation damage is related to large residual electrical resistivity degradation in the superconducting coils, especially its Al stabilizer.

Heat and Radiation Shield (Figure 2 and 3) serves to protect the superconducting coils of the Production Solenoid (PS) from the intense radiation generated by the 8 GeV kinetic energy pri-

Figure 2. All-bronze Heat and Radiation Shield old baseline

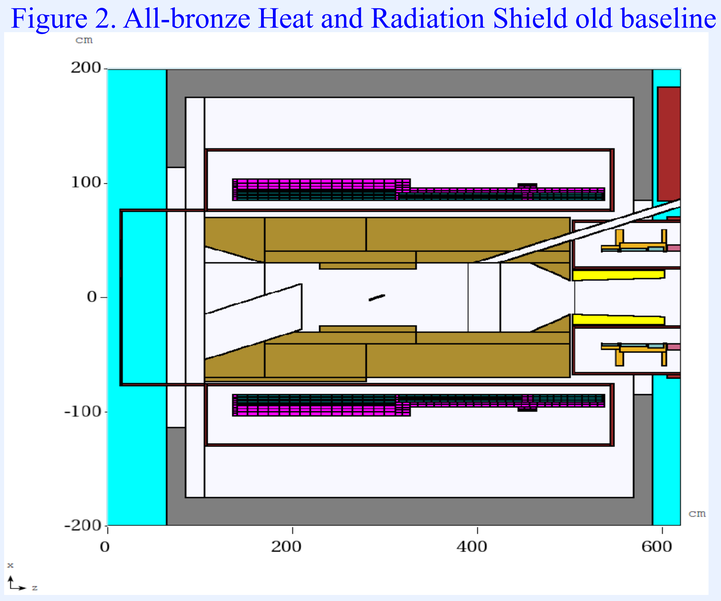


mary proton beam striking the production target within the warm bore of the PS.

This shield also protects the coils in the far upstream end of the Transport Solenoid (TS), a straight section of coils called TS1, at the exit from the PS.

Generally the constraints in the PS absorber design are quench stability of the superconducting coils, low dynamic heat loads to the cryogenic system, a reasonable lifetime of the coil components, acceptable -on maintenance conditions (<1 mSv/hr), compactness of the absorber that should fit into the PS bore and provide an aperture large enough to not compromise pion collection efficiency, cost, weight and other engineering constraints.

Recently, in the course of a cost optimization effort, after detailed studies of distributions of radiation quantities listed above in the SC coils, a solution was found (Figure 3) allowing reduction of material in the upstream part of HRS, by about 10 tonnes of bronze.

Figure 3. Reduced Heat and Radiation Shield MARS15 model.

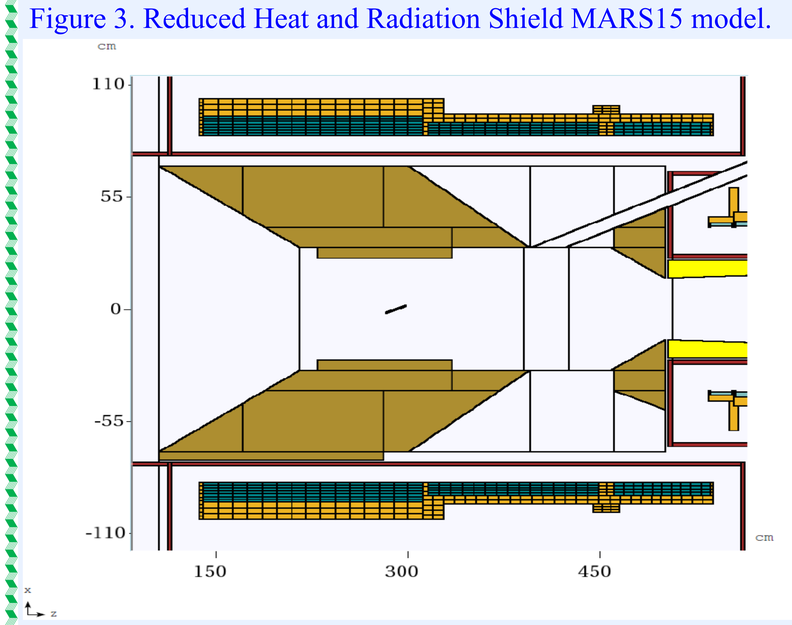


Effect of this reduction on backgrounds in Cosmic Ray Veto (CRV) counters is under study. Currently removal of the pieces has lead to increase of neutron flux in a CRV "hot spot" by about 40%. Designing of a bridge between "body" and "tail" parts of HRS to both shield the CRV counters and provide cooling to the "tail" part is being considered.

DPA and peak power density levels in the reduced HRS are shown in Figure 4. The distributions are

Figure 4. DPA (FermiDPA 1.0) and peak power density for the reduced Heat and Radiation Shield (Figure 3).

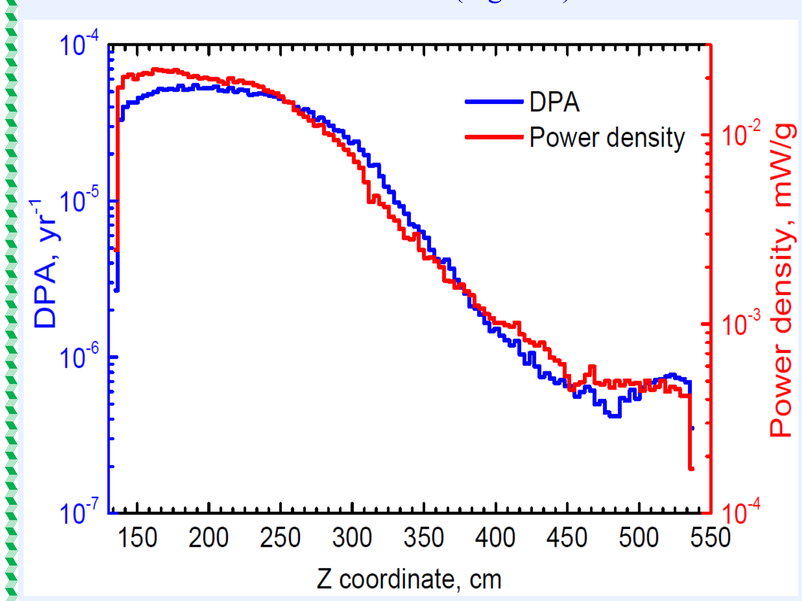


more flat than in the case of old baseline (Figure 2). Increase of the peak DPA relatively to that previously presented for old HRS is due to an improvement in MARS15 DPA model. Current DPA model represents itself a realization of the industry standard NRT model with the use of FermiDPA 1.0 cross section library containing DPA cross sections for 393 isotopes.

The 3D thermal analysis is performed for the radiation heat load at all stages of the HRS optimization. The FEM model created by COMSOL Multiphysics was discretized to the level of individual layers and the interlayer insulation/conducting sheets (Figure 5). The thermal

Figure 5. 3D model of PS cold mass, showing how the coils are assembled, red—NbTi alloy, green—Al stabi-

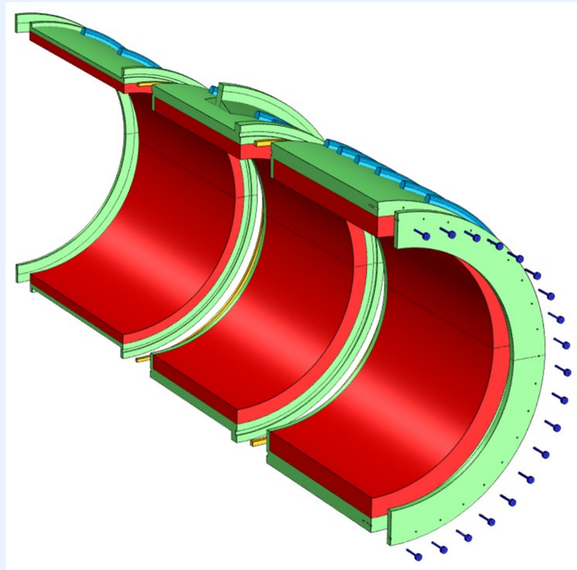

conductivity of each layer in the axial direction is modeled by the equivalent thermal conductivity of the insulated cable in that direction.

Figure 6. Power depositions for the reduced HRS.

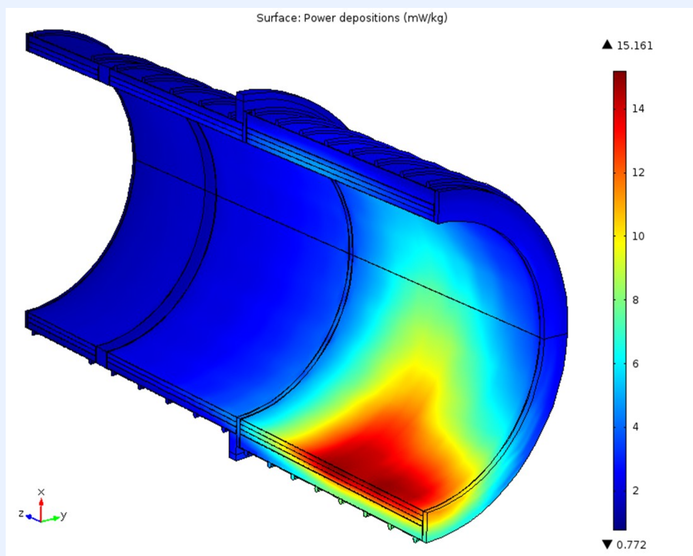


The coil layers were separated from each other by two layers of insulation with a layer of Al in between that was 1-2mm thick, depending on the location within the coil. The Al layers formed thermal bridges by connecting to the Al

Figure 7. Peak coil temperature at the reduced HRS.

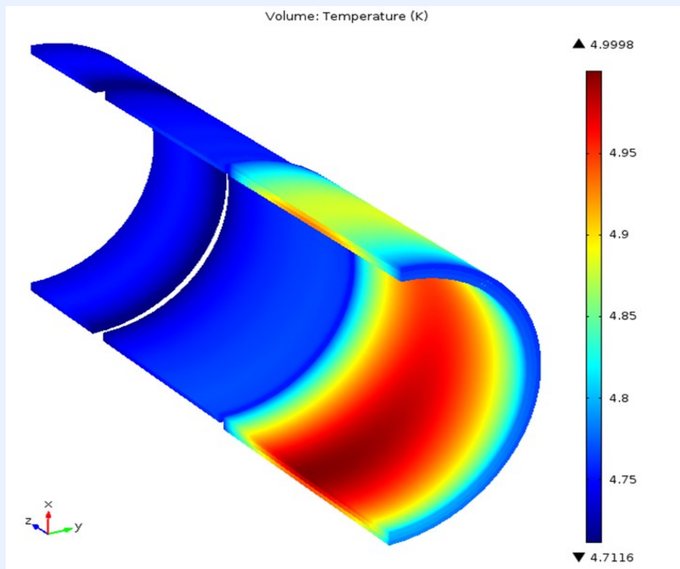


plates placed between the coil ends and the end flanges. Peak temperature is ~5 K (Figure 7).